ATOM ELECTRIC

OWNER'S MANUAL
B-SERIES

THANK YOU FOR CHOOSING ATOM ELECTRIC.

We have worked hard to make sure your board meets or exceeds your expectations. If for any reason it doesn't, or if you have any suggestions for improvements please let us know.

FOR WARRANTY ISSUES PLEASE CONTACT ATOM DIRECTLY.
DO NOT RETURN TO PLACE OF PURCHASE.

TOLL FREE - 1.877.627.4100
customerservice@mbs.com
atomlongboards www.atomlongboards.com atomlongboards

⚠ WARNING ⚠

RIDING THIS BOARD IS A RISKY ACTIVITY THAT MAY CAUSE SERIOUS INJURY OR DEATH. READ AND FOLLOW ALL INSTRUCTIONS IN THIS MANUAL BEFORE RIDING THIS BOARD.

SAFETY GUIDELINES

- ALWAYS WEAR HELMET, WRIST GUARDS, KNEE PADS, ELBOW PADS, AND FLAT SOLED SHOES WHILE RIDING THIS BOARD. MAKE SURE HELMET IS PROPERLY ADJUSTED AND BUCKLE FASTENED.

- THE RULES AND REGULATIONS FOR RIDING ELECTRIC SKATEBOARDS VARY FROM ONE LOCATION TO ANOTHER. LEARN AND OBEY THE LOCAL, STATE, AND FEDERAL RULES AND REGULATIONS WHERE YOU WILL BE RIDING.

- NOT RECOMMENDED FOR CHILDREN UNDER 13. CHILDREN 13 YEARS AND OLDER SHOULD ALWAYS BE SUPERVISED BY AN ADULT WHEN RIDING.

- ASSESS ALL OBSTACLES AND POTENTIAL DANGERS BEFORE RIDING.

- DO NOT RIDE ON A WET SURFACE.

- NEVER RIDE AT NIGHT OR UNDER POOR VISIBILITY.

- NEVER RIDE UNDER THE INFLUENCE OF ALCOHOL OR DRUGS.

- ALWAYS RIDE IN CONTROL AND WITHIN THE LIMITS OF YOUR OWN ABILITY.

- TO MAXIMIZE SIGNAL BETWEEN REMOTE CONTROL AND BOARD HOLD REMOTE CONTROL BELOW WAIST LEVEL AT ALL TIMES. NEVER RAISE REMOTE CONTROL ABOVE HEAD LEVEL WHILE RIDING.

- AVOID RIDING IN AREAS NEAR CELL PHONE TOWERS, RADIO TOWERS, HIGH VOLTAGE POWER LINES, OR OTHER POWERFUL ELECTROMAGNETIC EQUIPMENT.

- IN THE UNLIKELY EVENT THE SIGNAL BETWEEN YOUR REMOTE AND YOUR BOARD IS LOST, LOWER THE REMOTE CONTROL BELOW WAIST LEVEL, MOVE THROTTLE TO NEUTRAL POSITION, THEN TRY BRAKING. REPEAT UNTIL SIGNAL IS REGAINED AND BOARD CAN BE STOPPED. STOP RIDING. CHARGE REMOTE CONTROL BATTERY THEN TEST IN SAFE FLAT AREA AT LOW SPEED. IF PROBLEM HAPPENS AGAIN STOP RIDING IMMEDIATELY AND CONTACT ATOM FOR FURTHER INSTRUCTIONS. DO NOT RIDE YOUR BOARD AGAIN UNTIL PROBLEM IS RESOLVED.

- DO NOT DISASSEMBLE MOTOR, BATTERY, OR ANY ELECTRICAL PARTS.

- AVOID HEAVY IMPACTS, WATER, SAND/DIRT AND EXCESSIVE HEAT.

- THE REGENERATIVE BRAKING FEATURE OF THIS BOARD CHARGES THE BATTERY WHEN YOU BRAKE. TO AVOID DAMAGING YOUR BOARD DO NOT BRAKE FOR EXTENDED PERIODS OF TIME IMMEDIATELY AFTER CHARGING. WE RECOMMEND RIDING ON FLAT GROUND OR UPHILL BEFORE GOING DOWNHILL.

1 CHARGING BOARD

WARNING

⚠ Charge your board fully before riding for the first time.

⚠ Never charge battery when temperature is below 34F (1C) or above 104F (40C). Ideal charging / operating temperature range is 50 - 75F (10 - 24C).

⚠ Charge in a safe dry area.

⚠ Only use the charger provided with your board. Using other chargers will void your warranty, damage your board, and could cause an electrical hazard.

⚠ Do not leave your board in an uncharged state (less than 30% charge) for more than a few days. Doing so will decrease battery life and may eventually prevent battery from charging.

CHARGING PROCEDURE

1. Make sure board is powered OFF before charging. Power is OFF when the red LED light next to power button is not lit.

2. Plug charger into charging port on your board (on side of battery box - near rear truck).

3. Plug the other end of the charger into wall outlet.

4. The light on charger will glow “red” while charging, then change to “green” when board is fully charged. When fully charged, disconnect charger from wall, then from board.

Charging (red)

Charged (green)

2 REMOTE CONTROL

Familiarize yourself with the remote control.

RED BUTTON

POWER ON/OFF
Press and hold for two seconds to turn power on or off.

SPEED CHOICE MODE (LOW / HIGH)
As soon as the remote is turned on it automatically enters speed choice mode. While in this mode pressing the red button will toggle between the two available speed settings (low / high).
Note: When board enters low-power mode the speed mode will automatically switch to LOW.

MOTOR DIRECTION MODE (FORWARD / REVERSE)
After the motion controller is moved for the first time the remote automatically exits speed choice mode and enters motor direction mode. While in this mode pressing the red button will change the direction the board goes (forward / reverse).
It remains in this mode until power is turned off.

⚠ WARNING
Never press red button while riding. Bring board to a complete stand-still before pressing red button to change direction.

MOTION CONTROLLER

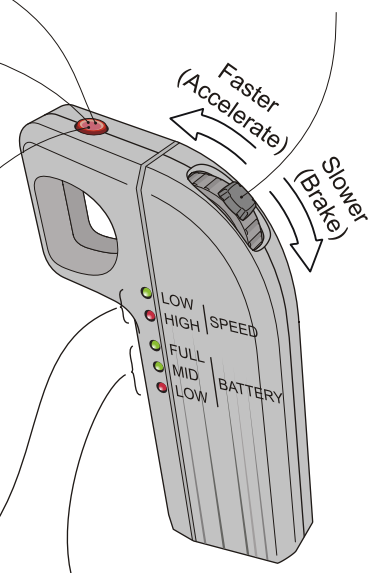

SPEED MODE LIGHTS

A solid LED light in this area indicates which speed mode is active.

A flashing LED light in this area indicates no connection between board and remote. Check that board has been turned on. If so, turn off board AND remote for a few seconds then turn on again. If this LED is still flashing follow the steps on the next page for "pairing remote with board".

BATTERY LIGHTS

THREE SOLID LIGHTS
Battery in board is FULL charge
(Yes!)

TWO SOLID LIGHTS
Battery in board is MID charge
(Maybe head back soon)

ONE SOLID LIGHT
Battery in board is LOW charge
(Charge battery)

ONE LIGHT FLASHING FAST*
Battery in board is VERY LOW charge
(Charge immediately to avoid damaging battery)

*If power light on board also starts to flash your battery is dangerously low. At this point you can no longer use your remote to accelerate but you can still use your it to brake. Stop riding. Charge board fully before riding again.

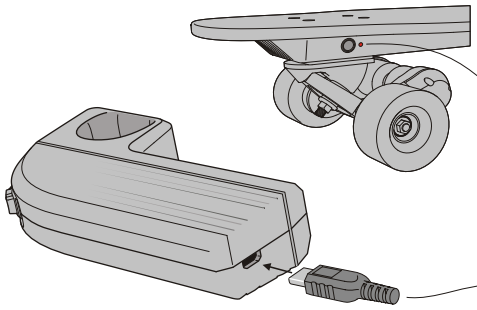

ONE LIGHT PULSING SLOWLY
Battery in REMOTE CONTROL* is low.
Plug remote control in via USB to recharge.
*Note: All other signals refer to battery power in board.

3 GETTING STARTED

After your board has been fully charged and you have disconnected your charger from the wall and board, it is safe to turn on your board by pressing and holding the power button for 2 seconds until the power light glows solid red. Wait 5 seconds before doing anything else. This gives the board's micro computer time to boot.

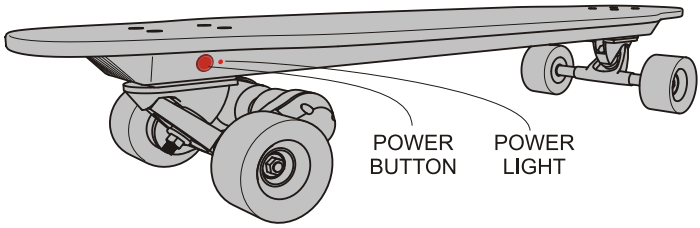

Next, power up your remote by pressing and holding its red power button for 2 seconds. When board and remote are connected one of the "speed mode" lights on your remote should be a solid color (refer previous page for more information on this). You're now ready to ride.

If the "speed mode" light on your remote is still flashing you might need to pair your remote and board together by following the instructions below.

4 PAIRING REMOTE WITH BOARD

1. Ensure board and remote are both powered OFF.

2. Simultaneously press and hold the power buttons on the board AND the remote untill you hear 3 beeps (2 short then a long one a few seconds later).

3. Power off both board and remote.

4. Power both back on again (wait 5 seconds for board to boot).

5. One of the "speed mode" lights on your remote should now be solid.

5 TIPS FOR YOUR FIRST RIDE

1. Don't forget your helmet and pads!

2. Start on LOW speed mode (refer previous page). Change mode to HIGH speed mode only when you feel very comfortable riding in LOW speed mode.

3. Apply brake on your remote to steady the board when you step onto it.

4. Shift weight to front foot before accelerating / back foot before decelerating.

5. When you are ready to go, slide the motion controller forward to start your adventure. Try braking while you are still comfortable with your speed to get the feel for it. Return motion controller to neutral position to coast.

6. Try to not switch suddenly between speeding up and braking. Smooth is best.

6 TROUBLESHOOTING

	PROBLEM	POSSIBLE CAUSE	POSSIBLE SOLUTION
POWER / CHARGING	My board is not charging. The light on my charger does not come on.	Charger cord is not properly plugged into wall, charger, or board.	Check that power cord is well connected at wall outlet, charger, and board. All should be pushed in fully. Check that wall outlet is turned on.
	I pressed the power button on my board. The power light does not come on (no lights on board).	Battery in board is depleted.	Charge board.
	I pressed the power button on my board and on my remote but my board won't respond to remote. The board's power light glows red, but one of the "speed mode" lights on the remote is blinking.	Board might not have booted up correctly.	Turn off board and remote. Wait 5 seconds, then try again.
		Remote has not been correctly paired with board.	Pair your remote with your board by following the steps in "PAIRING REMOTE WITH BOARD" section of this manual.
	I pressed the power button on my board. The power light is flashing red. Board won't accelerate.	Your board's battery is extremely low.	Fully charge your board as soon as possible.
RIDING	I stopped riding for a few minutes. When I jumped back on my board it wouldn't work.	To save battery your board will automatically turn itself off after a few minutes.	Turn board on again by pressing and holding power button for a few seconds.
	My board temporarily didn't respond to my remote while I was riding.	Signal loss between board and remote.	Stop riding. Check if the battery warning light (the very bottom LED) is flashing. If flashing slowly, charge remote control. If flashing fast, charge board. Once charged, test again in a safe and flat area at low speed.
			TIP: Remember to hold remote at or below waist level at all times. One of the worst places to hold your remote is on top of your head.
			TIP: Avoid riding in areas with nearby cell phone towers, radio towers, high voltage power lines, or other electromagnetic equipment.
	Ride time / range is less than I expected.	Ride time / range varies depending on rider weight, the steepness of the terrain, how aggressively you accelerate, and your top speed.	1. Try accelerating more gradually (i.e. take more time to reach cruising speed), and decrease cruising speed.
			2. A lot of power is used when starting from a stand-still. If you feel comfortable doing so, start by pushing off with your foot to conserve power / extend range.
			3. Remember to turn off your board and remote control as soon as you're done riding.
	Ride time / range is less than when I first got my board.	The capacity of your battery (the amount of power it holds) decreases gradually over time. After 500 charge cycles, your battery will have lost approximately 20% of it's capacity.	Consider replacing battery when ride time / range is too low for your needs. Contact Atom Electric customer service department for help.
	My board feels unstable or wobbles at high speeds.	Your trucks' kingpins are too loose for your weight.	Increase the resistance of your bushings by tightening your kingpin nuts on both trucks (turn nut clockwise).
	My board is too difficult to turn. I want to turn sharper.	Your trucks' kingpins are too tight for your weight.	Decrease the resistance of your bushings by loosening your kingpin nuts (turn nut counter-clockwise). Never loosen nut past the point where the kingpin threads are flush with the top of the nut.
	I love riding my board but I'm getting a little bored.	Are you riding alone?	Persuade some friends to buy Atom Electric boards. The more people you ride with, the more fun you'll have. Share your riding experiences online.
MAINTENANCE	I've had my board for a long time (at least a year or two). Now my battery won't hold a charge at all.	Your battery's life has ended.	Consider replacing battery. Contact Atom Electric customer service department for help.
	My wheels are wearing down.	You've obviously been riding. Good on ya!	Contact your Atom Electric dealer to purchase replacements.
	My drive belt broke.		
	My bearings are noisy.		
	My truck bushings are not as responsive as they once were.		

WARRANTY

Atom Electric Consumer Warranty Policy:
Atom Electric warrants products against defects in workmanship and/or materials to the original retail purchaser for a period of six (6) months from the original date of retail purchase. A copy of receipt from authorized Atom dealer must be submitted with any warranty claim.

Warranty is limited to manufacturer's defects in workmanship or materials. The warranty is void if the product is damaged due to any of the following:
- accident or impact;
- misuse or abuse;
- normal wear and tear;
- exposure to water;
- battery left discharged for extended period of time;
- battery charged with charger other than one provided with board;
- modifications to the product;
- improper assembly or repairs;
- use in competition;
- commercial use.

Warranty claims can be filed directly atom via www.atomlongboards.com.

EXCLUSIVITY:
WARRANTIES SET FORTH IN THIS PROVISION ARE EXCLUSIVE AND IN LIEU OF ALL WARRANTIES EXPRESSED OR IMPLIED, INCLUDING WARRANTIES ARISING FROM COURSE OF DEALING OR USING OR TRADE. ATOM MAKES NO WARRANTY EXPRESSED OR IMPLIED, OF MERCHANTABILITY OR FITNESS FOR ANY PARTICULAR PURPOSE.

PRODUCT SUBSTITUTIONS:
ATOM RESERVES THE RIGHT TO UPDATE MODEL DESIGNS, OR SUBSTITUTE MODELS WITH GRAPHIC AND/OR COLOR CHANGES. PRODUCT REPLACEMENTS ARE SUBJECT TO ITEM AVAILABILITY. IF AN EXACT REPLACEMENT IS NOT AVAILABLE, REPLACEMENT WILL BE MADE WITH A COMPARABLE ITEM OF EQUAL OR GREATER VALUE.

LIMITATION OF LIABILITY:
SELLER SHALL NOT BE LIABLE IN CONTRACT, IN TORT (INCLUDING NEGLIGENCE), OR OTHERWISE FOR DAMAGE OR LOSS OF OTHER PROPERTY, LOSS OF PROFITS OR REVENUE, LOSS OF USE OF PROPERTY OR EQUIPMENT, CLAIMS OF CUSTOMERS OF THE BUYER, OR FOR ANY SPECIAL, INDIRECT, INCIDENTAL, OR CONSEQUENTIAL DAMAGES WHATSOEVER. UNDER NO CIRCUMSTANCES SHALL SELLER'S LIABILITY EXCEED THE PURCHASE PRICE OF THE GOODS IN RESPECT OF WHICH DAMAGES ARE CLAIMED. THE OBLIGATION OF ATOM LONGBOARDS AND BUYERS SOLE REMEDY UNDER ITS LIMITED WARRANTY IS THE SUPPLY OF A REPLACEMENT FROM REGULAR PRODUCT INVENTORY LINES. ATOM SHALL NOT BE LIABLE FOR ANY OTHER COSTS INCURRED NOR SHALL ATOM BE LIABLE FOR ANY SPECIAL, INDIRECT, INCIDENTAL OR CONSEQUENTIAL DAMAGES.

		B-Series Specs	
		B.18	**B.36**
Battery (Board)	Type	Lithium-Ion	Lithium-Ion
	Cells	10S x 2P (Samsung 25R-18650)	6S x 4P (Samsung 22P-18650)
	Ah	5Ah	8.8Ah
	Voltage	36V	24V
	Wh	180 Wh	211 Wh
	Charge Time	2.5 hours	3 hours
	Rechargeable	800 times	800 times
Motor	Type	Brushless direct current	Brushless direct current
	Power	1800W	3600W (1800W x 2)
Wheel	Material	High performance PU	High performance PU
	Dimensions	80mm*45mm	80mm*45mm
	Hardness	78a	78a
Battery (Remote Control)	Capacity	800mA	800mA
	Type	Lithium-Ion	Lithium-Ion
	Charge Time	90 minutes	90 minutes
ESC		Sine Wave (FOC)	Sine Wave (FOC)

ATOM ELECTRIC

212 SUTTON LANE
COLORADO SPRINGS, CO 80907
USA
TOLL FREE - 1.877.627.4100
customerservice@mbs.com
www.atomlongboards.com

Be safe. Have Fun. Spread the word.
Like us on Facebook - @atomlongboards
Follow us on Instagram - @atomlongboards